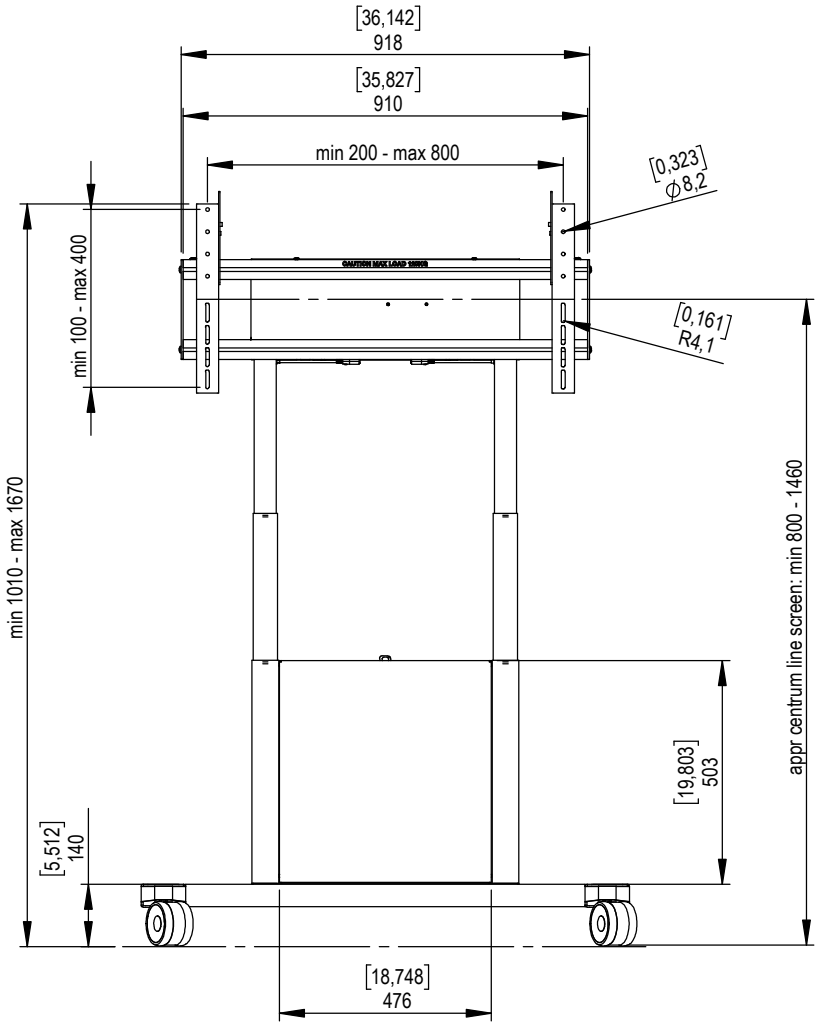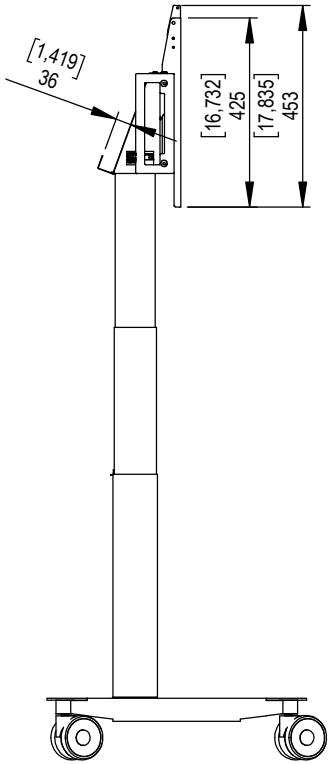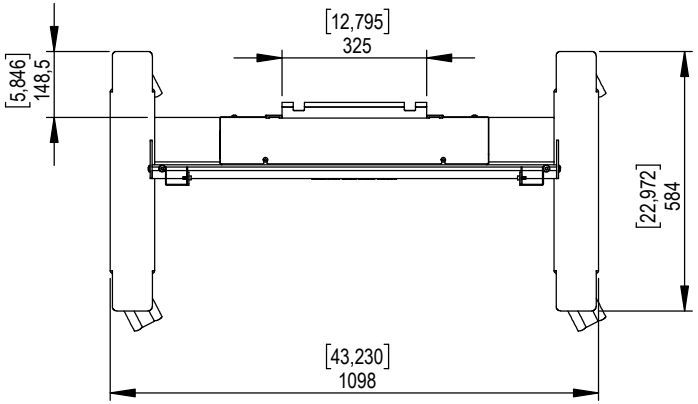Technical drawing (mm/inch)